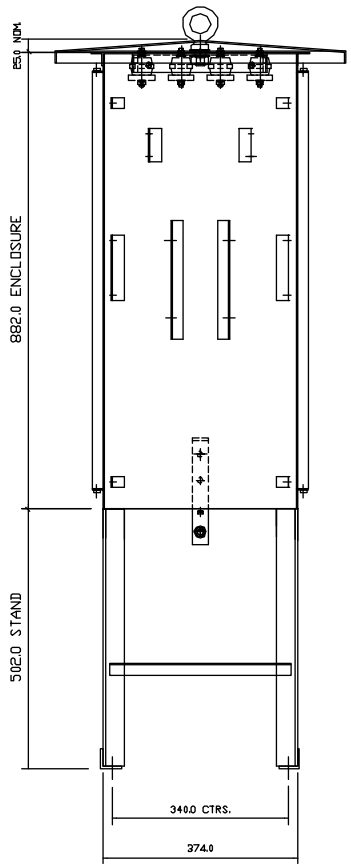

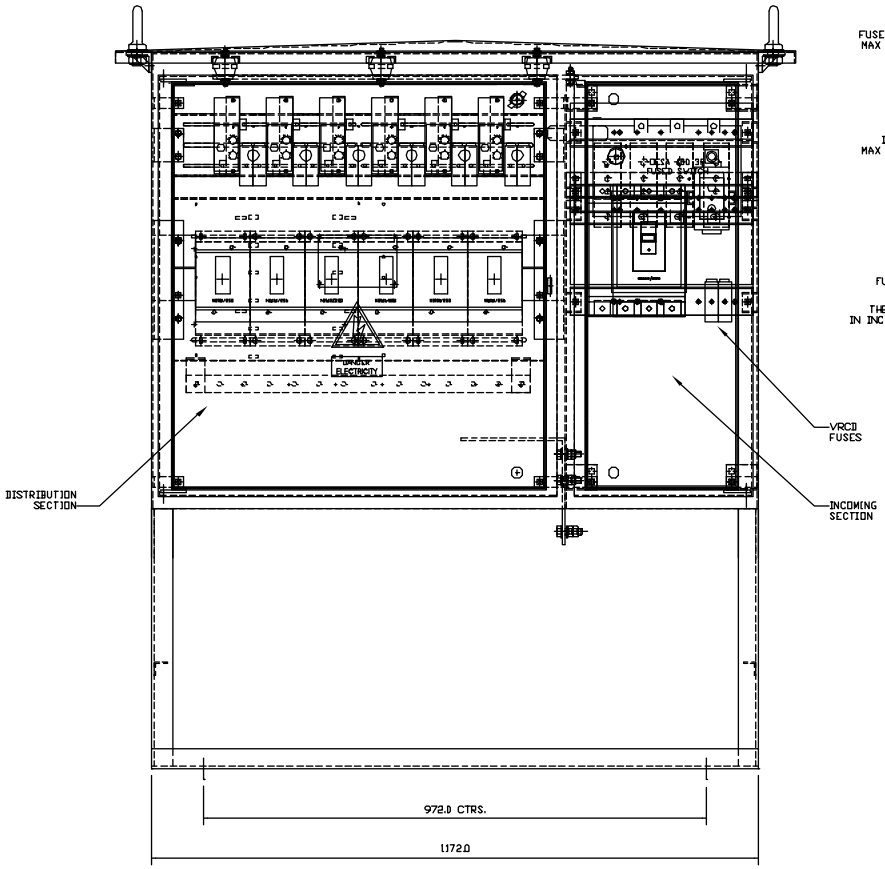

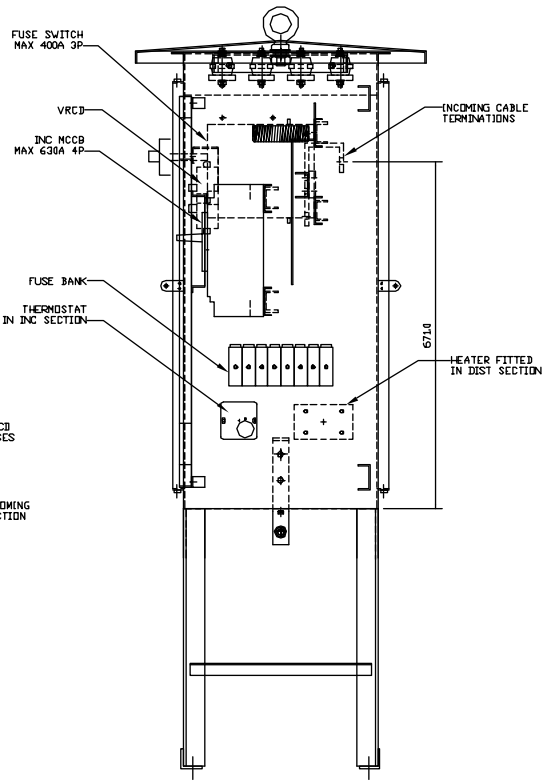

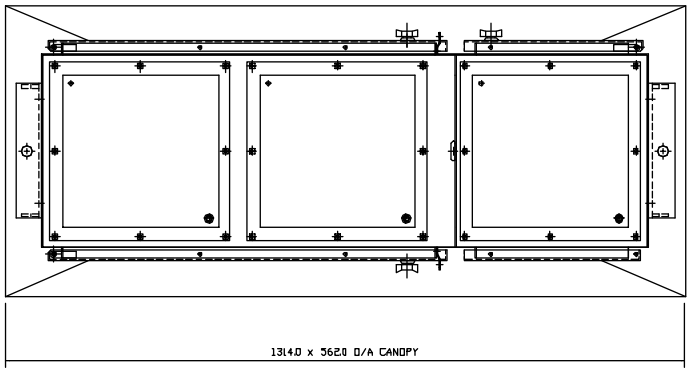

ISSUED BY DESIGN DEPARTMENT

CUSTOMER INFORMATION COPY

REV.	A	B
ECN:	4278	4404

UNLESS OTHERWISE STATED:-
ALL DIMENSIONS IN MM.
TOLERANCES TO H30052
FIXING STANDARD TO H30051
WIRING STANDARD TO H20051
WELDING STANDARD TO QAI 81.

DO NOT SCALE THIS DRAWING.
IF IN DOUBT, ASK.

TITLE
GENERAL ASSEMBLY
MDA B52

MATERIAL | SIZE
REF. | COPY ISSUED
ORIGINAL SCALE 1:5
DATE 22.06.06
DRN. MG
CHKD.
APPD.

BLAKLEY ELECTRICS LIMITED

DRAWING No. A14897
REVISION B
SHEET 1 OF 1

THIS DRAWING IS THE PROPERTY AND COPYRIGHT OF BLAKLEY ELECTRICS AND MUST NOT, WITHOUT THEIR WRITTEN CONSENT, BE PASSED ON, COPIED, OR USED FOR ANY OTHER PURPOSE.