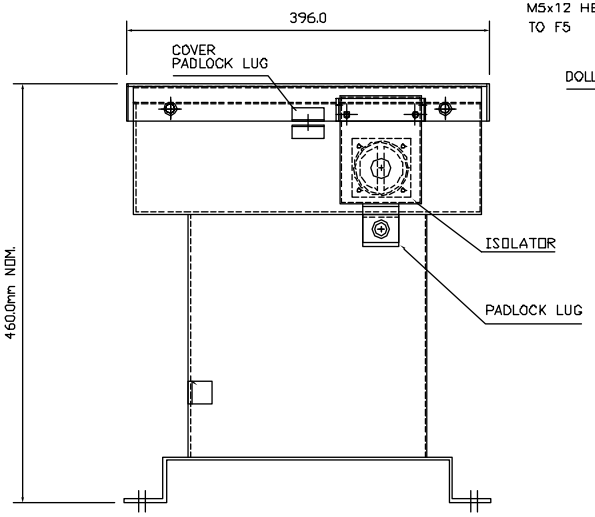

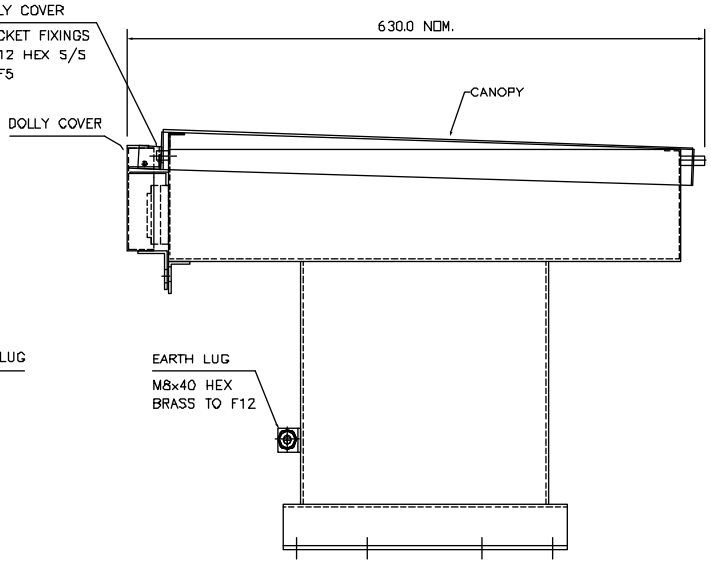

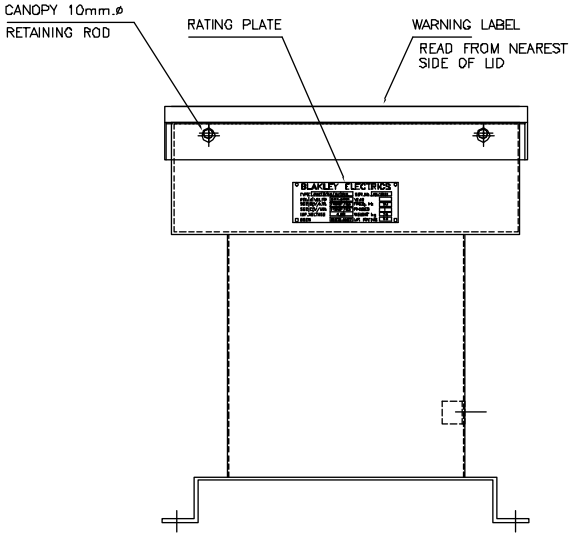

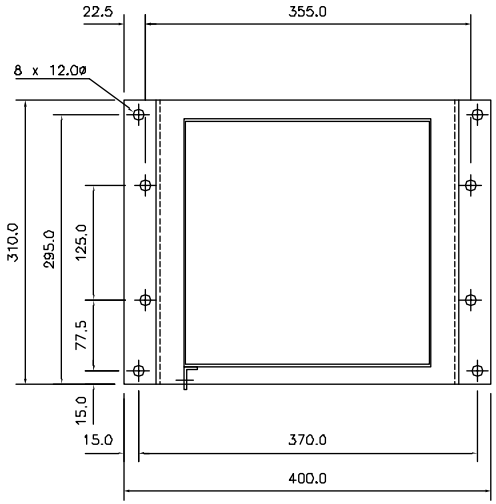

BASE FIXING DETAILS

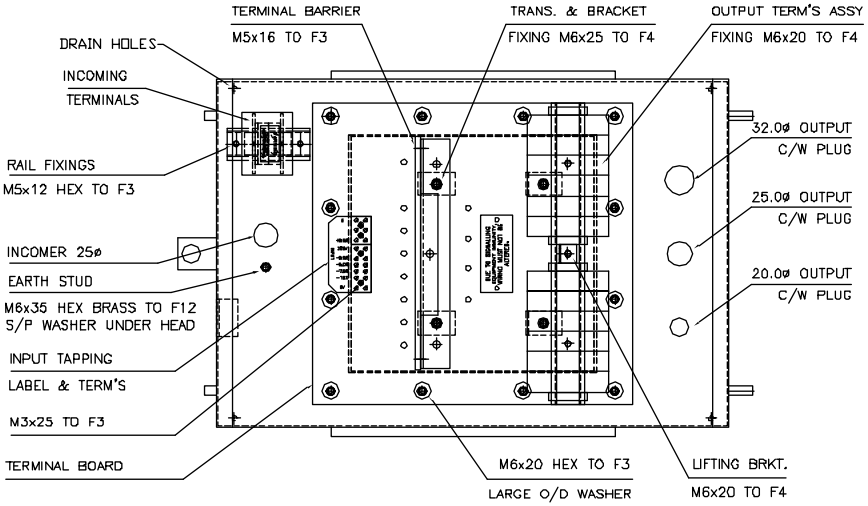

VIEW FROM TOP (CANOPY REMOVED)

ISSUED BY DESIGN DEPARTMENT

CUSTOMER INFORMATION COPY

NOTES:

- EXTERNAL WARNING LABEL ON CANOPY FIXED WITH M4x12 POZI HD. STAINLESS STEEL SCREWS TO F1 WITH NYLON PLAIN WASHER OUTSIDE IN PLACE OF STEEL WASHER
- ENTRELEC DIN RAIL MOUNTING TERMINALS TO BE TIGHTENED TO BETWEEN 1.2 AND 1.4NM.
- DOLLY COVER HINGES FORMED BY 2 No. 2BA×5/8" HEX SCREWS, STAINLESS STEEL, TO F2, USING PLAIN WASHERS WITH NYLOC NUTS, WITH NUTS FITTED TO INSIDE OF BRACKET
- CANOPY CROSSBOND EARTH STUD, M5x20 HEX BRASS, CONNECTED TO FIG. 14. CROSSBOND EARTH LEAD TO BE 750mm. LONG.

THIS DRAWING IS THE PROPERTY AND COPYRIGHT OF BLAKLEY ELECTRICS AND MUST NOT, WITHOUT THEIR WRITTEN CONSENT, BE PASSED ON, COPIED, OR USED FOR ANY OTHER PURPOSE.

REV:	A	B
EDR:	4592	4673

UNLESS OTHERWISE STATED:-
ALL DIMENSIONS IN MM.
TOLERANCES TO H30052
FIXING STANDARD TO H30051
WIRING STANDARD TO H20051
WELDING STANDARD TO QAI 61.

DO NOT SCALE THIS DRAWING.
IF IN DOUBT, ASK

TITLE
GENERAL ASS'Y
PHT/5/SH/PJ/DUAL/IP23
RAILTRACK

MATERIAL | SIZE

REF. STANDARD | COPY ISSUED

ORIGINAL SCALE 1:4
DATE 17.10.07
DRN. JML
CHKD.
APPD.

BLAKLEY ELECTRICS LIMITED

DRAWING No. B12572 | REVISION B

SHEET 1 OF 1

A2