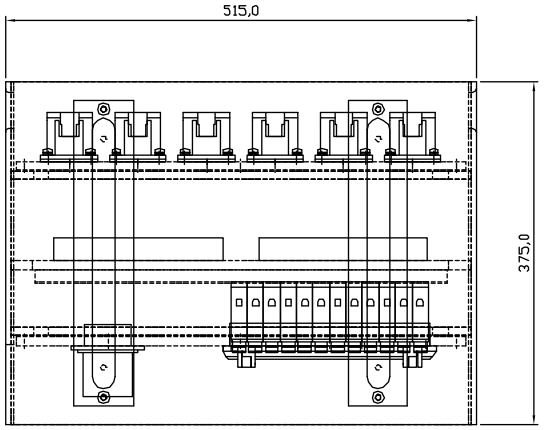

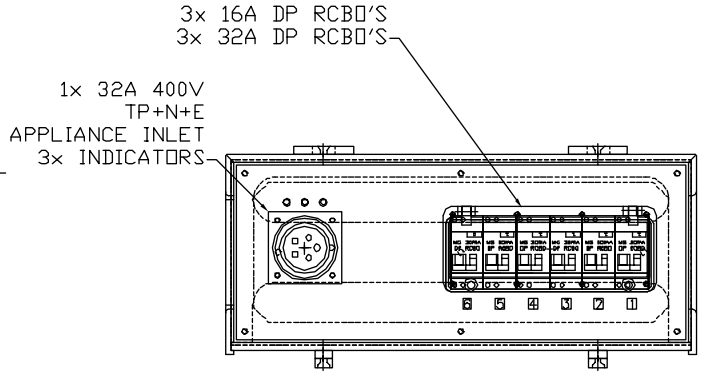

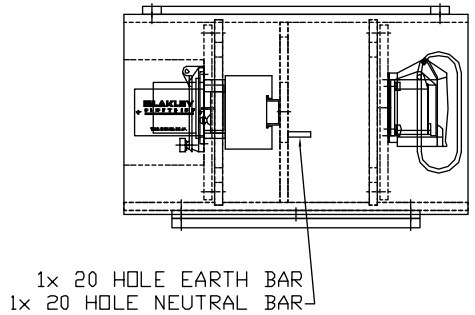

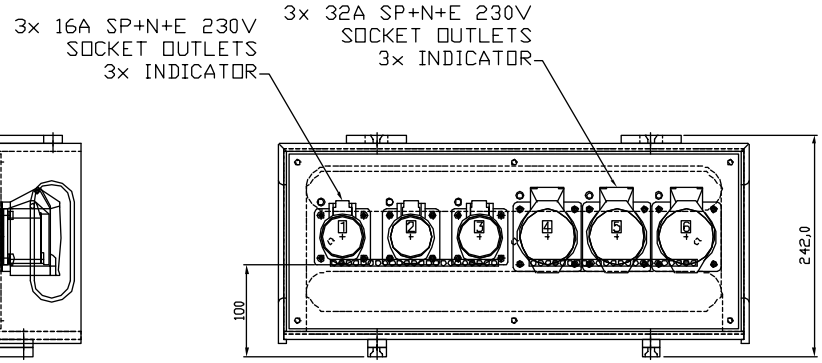

ISSUED BY DESIGN DEPARTMENT

CUSTOMER INFORMATION COPY

REV: –			
EDR: –			
UNLESS OTHERWISE STATED:– ALL DIMENSIONS IN MM. TOLERANCES TO H30052 FIXING STANDARD TO H30051 WIRING STANDARD TO H20051 WELDING STANDARD TO QAI 61.	MATERIAL	SIZE	
	REF. STANDARD	COPY ISSUED	
DO NOT SCALE THIS DRAWING. IF IN DOUBT, ASK	ORIGINAL SCALE 1:4	BLAKLEY ELECTRICS LIMITED	
TITLE IDA P10/A1–32 400V/S6 GENERAL ASSEMBLY	DATE 06/06/08		
	DRN. RLL	DRAWING No. B18142	REVISION
	CHKD.		
	APPD.	SHEET 1 OF 1	

THIS DRAWING IS THE PROPERTY AND COPYRIGHT OF BLAKLEY ELECTRICS AND MUST NOT, WITHOUT THEIR WRITTEN CONSENT, BE PASSED ON, COPIED, OR USED FOR ANY OTHER PURPOSE.

A2