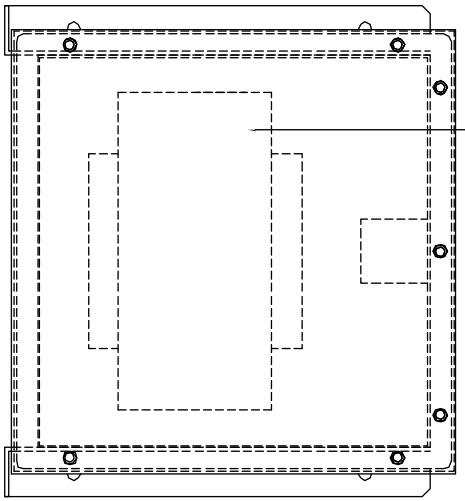

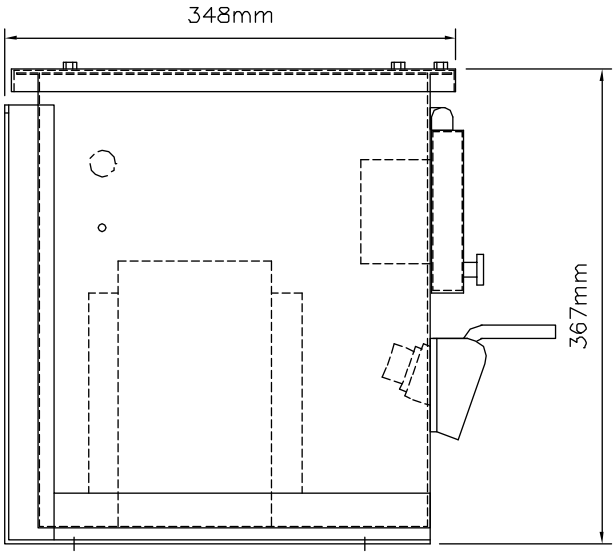

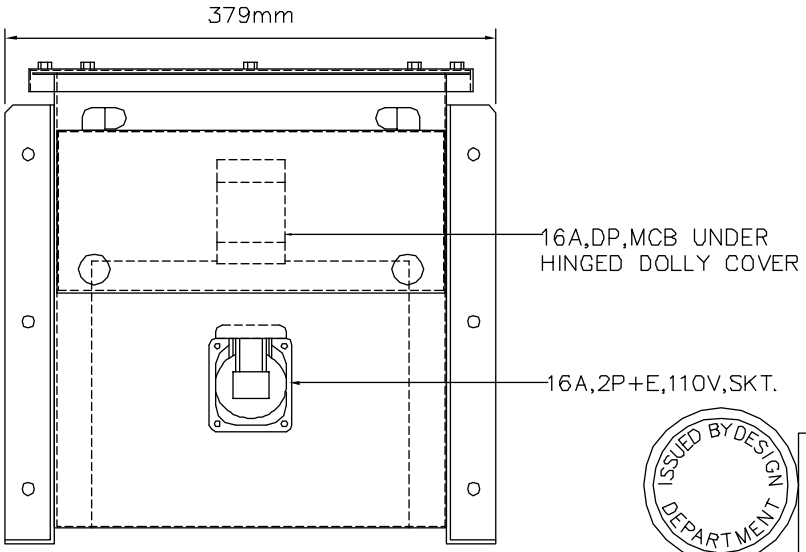

ISSUED BY DESIGN DEPARTMENT

CUSTOMER INFORMATION COPY

REV:	A
EDR:	4960

UNLESS OTHERWISE STATED:-
ALL DIMENSIONS IN MM.
TOLERANCES TO H30052
FIXING STANDARD TO H30051
WIRING STANDARD TO H20051
WELDING STANDARD TO QAI 61.

DO NOT SCALE THIS DRAWING.
IF IN DOUBT, ASK

TITLE
GENERAL ASSY
TH/1/2/C1-S1/GALV/LUL

MATERIAL: MILD STEEL
SIZE:
REF. A7030004
COPY ISSUED:
ORIGINAL SCALE 1:4
DATE. 21.11.2007
DRN. B.JONES
CHKD.
APPD.

BLAKLEY ELECTRICS LIMITED

DRAWING No. C13366
REVISION A
SHEET 1 OF 1

A3

THIS DRAWING IS THE PROPERTY AND COPYRIGHT OF BLAKLEY ELECTRICS AND MUST NOT, WITHOUT THEIR WRITTEN CONSENT, BE PASSED ON, COPIED, OR USED FOR ANY OTHER PURPOSE.