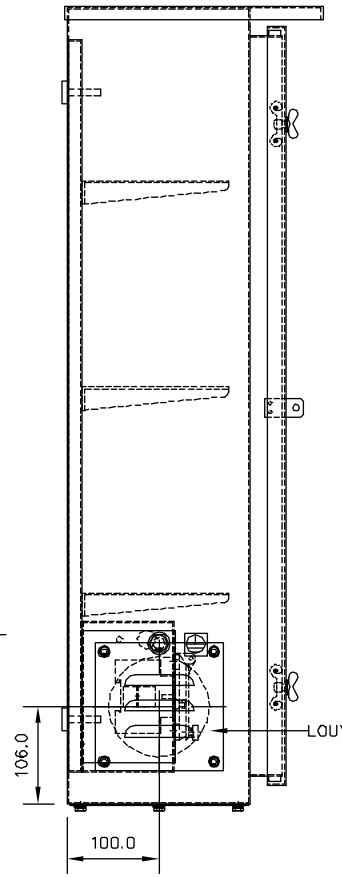

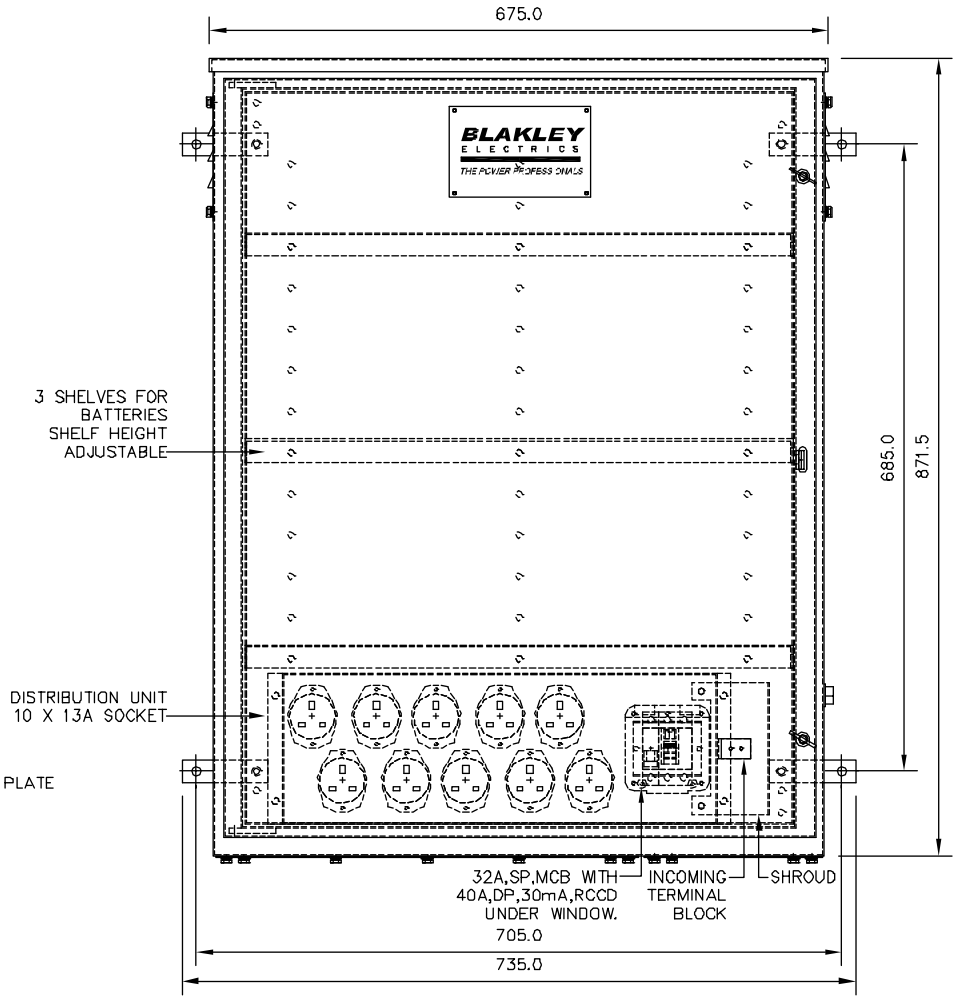

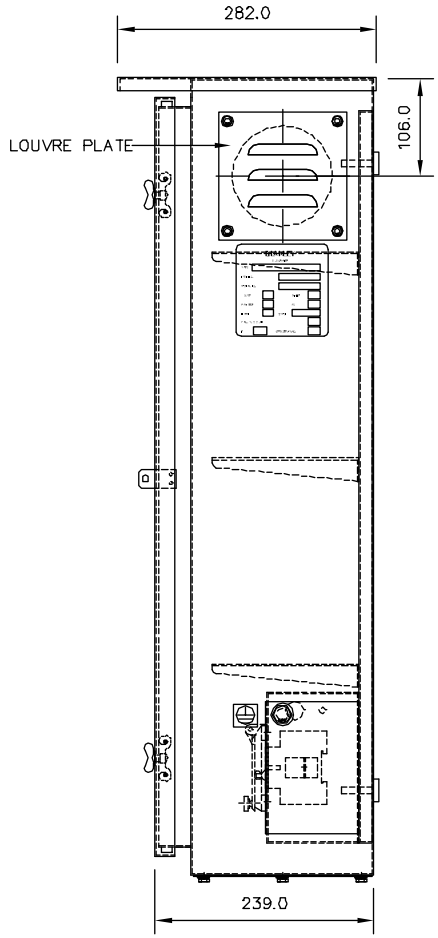

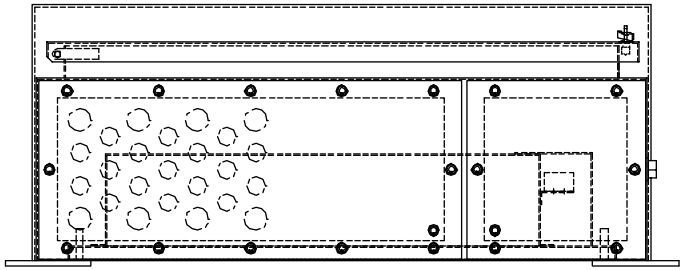

ISSUED BY DESIGN DEPARTMENT

CUSTOMER INFORMATION COPY

BASED ON DWG: A70B1890

REV: A			
EDR: 4531			
UNLESS OTHERWISE STATED:– ALL DIMENSIONS IN MM. TOLERANCES TO H30052 FIXING STANDARD TO H30051 WIRING STANDARD TO H20051	MATERIAL	SIZE	
	REF. S140257	COPY ISSUED	
DO NOT SCALE THIS DRAWING. IF IN DOUBT, ASK	ORIGINAL SCALE 1:4	BLAKLEY ELECTRICS LIMITED	
	DATE 22.02.07		
TITLE GEN ASSY POWER CENTRE B3 BLAKLEY ELECTRICS	DRN. MG	DRAWING No. C16813	REVISION A
	CHKD.		
	APPD.	SHEET 1 OF 1	

A2

THIS DRAWING IS THE PROPERTY AND COPYRIGHT OF BLAKLEY ELECTRICS AND MUST NOT, WITHOUT THEIR WRITTEN CONSENT, BE PASSED ON, COPIED, OR USED FOR ANY OTHER PURPOSE.