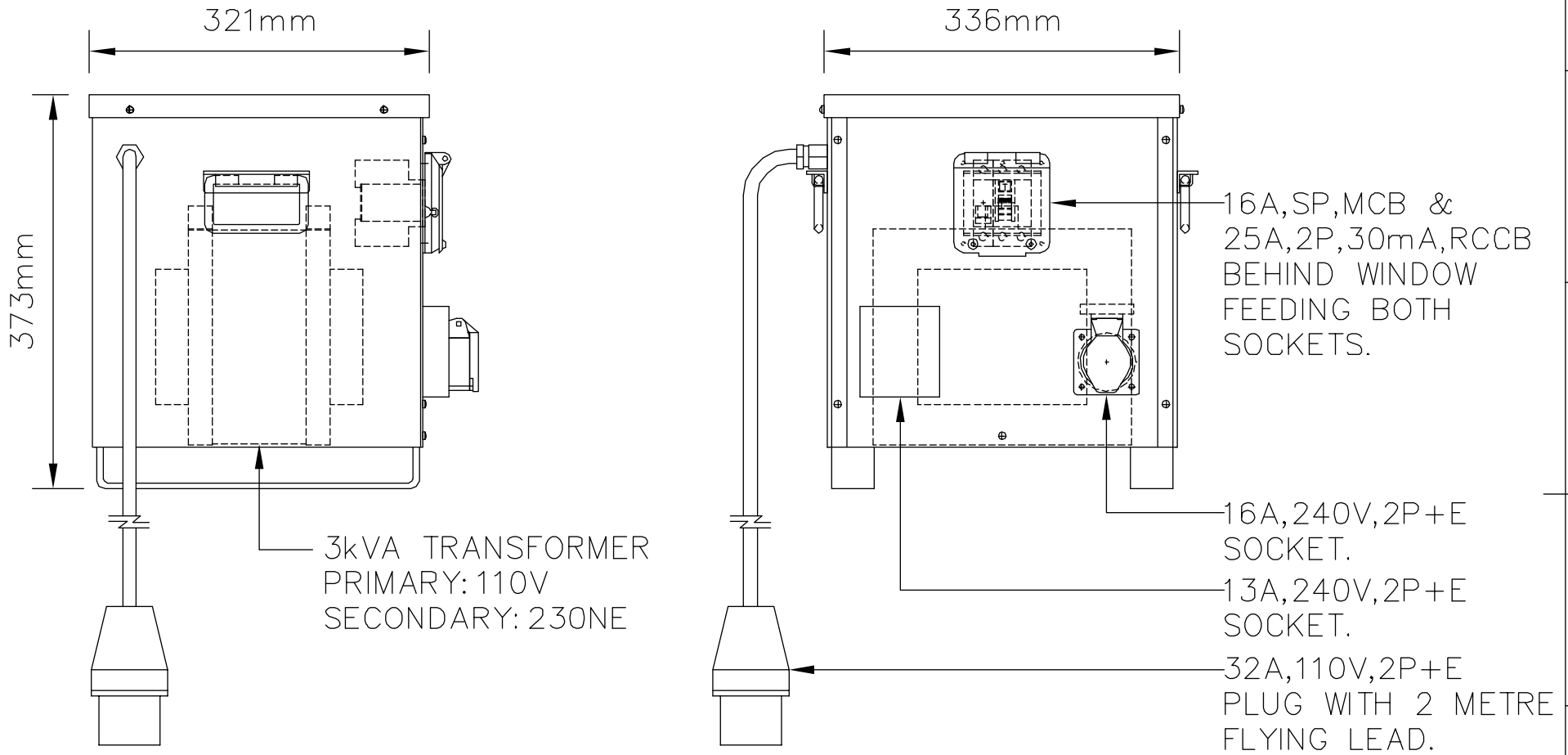

ISSUED BY DESIGN DEPARTMENT

CUSTOMER INFORMATION COPY

REV:	
EDR:	
UNLESS OTHERWISE STATED:– ALL DIMENSIONS IN MM. TOLERANCES TO H30052 FIXING STANDARD TO H30051 WIRING STANDARD TO H20051 WELDING STANDARD TO QAI 61.	MATERIAL / SIZE
	REF. S210255 / COPY ISSUED
DO NOT SCALE THIS DRAWING. IF IN DOUBT, ASK	ORIGINAL SCALE 1:4 / DATE. 20.12,2007
TITLE GENERAL ASSY STSC/3/RCD/S2	DRN. B.JONES / CHKD. / APPD.
	BLAKLEY ELECTRICS LIMITED
	DRAWING No. C17794 / REVISION
	SHEET 1 OF 1

THIS DRAWING IS THE PROPERTY AND COPYRIGHT OF BLAKLEY ELECTRICS AND MUST NOT, WITHOUT THEIR WRITTEN CONSENT, BE PASSED ON, COPIED, OR USED FOR ANY OTHER PURPOSE.

A3