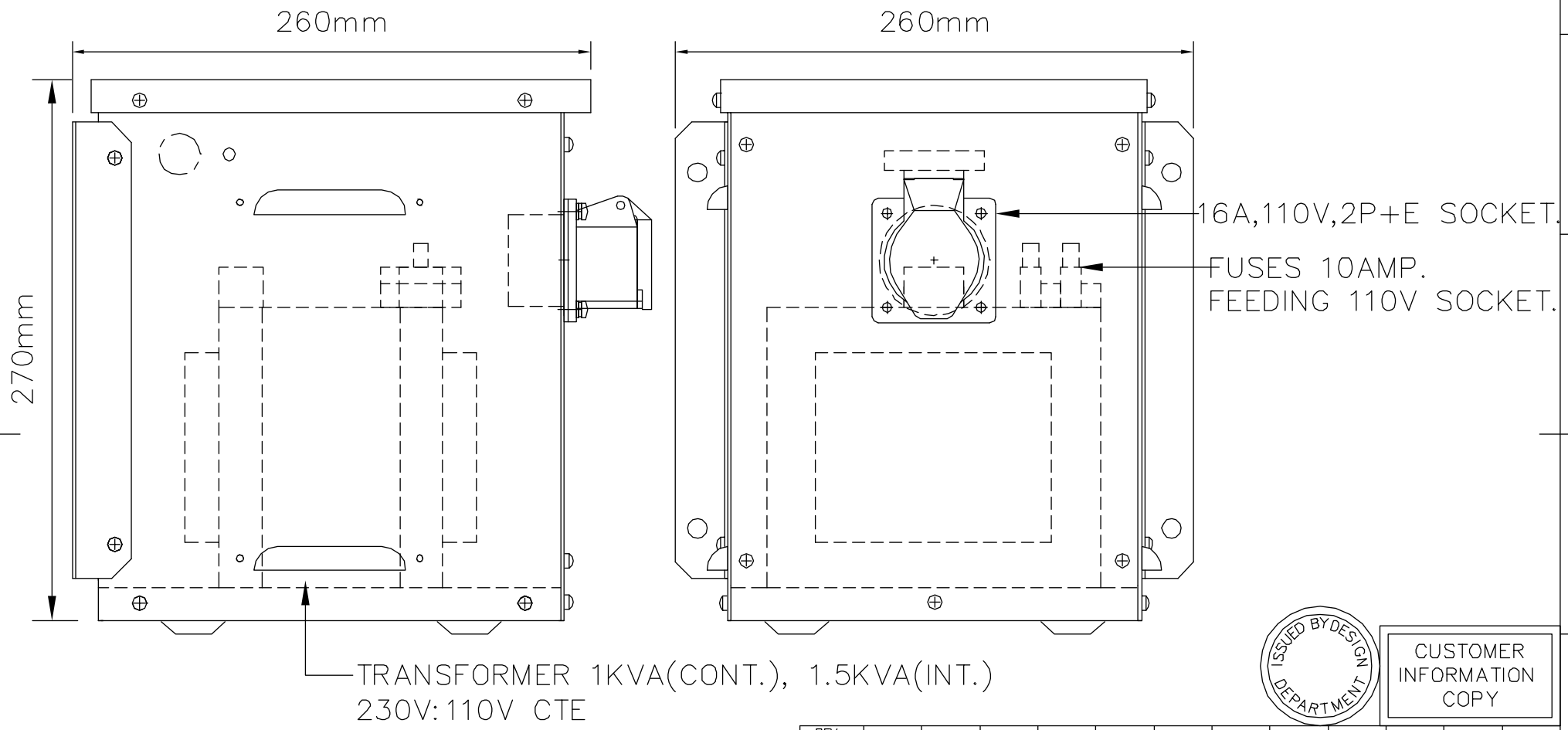

ISSUED BY DESIGN DEPARTMENT

CUSTOMER INFORMATION COPY

REV:	
EDR:	
UNLESS OTHERWISE STATED:– ALL DIMENSIONS IN MM. TOLERANCES TO H30052 FIXING STANDARD TO H30051 WIRING STANDARD TO H20051 WELDING STANDARD TO QAI 61.	MATERIAL / SIZE
	REF. S210127 / COPY ISSUED
DO NOT SCALE THIS DRAWING. IF IN DOUBT, ASK	ORIGINAL SCALE 1:2 / BLAKLEY ELECTRICS LIMITED
TITLE GENERAL ASSY TLW/I/1/S1/F/IP23	DATE. 18.08.2009
	DRN. B.JONES / DRAWING No. C19590 / REVISION
	CHKD.
	APPD. / SHEET 1 OF 1

THIS DRAWING IS THE PROPERTY AND COPYRIGHT OF BLAKLEY ELECTRICS AND MUST NOT, WITHOUT THEIR WRITTEN CONSENT, BE PASSED ON, COPIED, OR USED FOR ANY OTHER PURPOSE.

A3