BLAKLEY ELECTRICS

CASE STUDY
DATA SHEET

Assemblies for Nuclear Decommissioning

Decommissioning a nuclear power facility is a very complex and lengthy process. In recent years various decommissioning strategies have been developed, which include immediate dismantling, deferred dismantling (which occurs after radioactivity has been allowed to decay under controlled conditions) and entombment, where radioactive contaminants are encased on site in structurally sound material such as concrete. Whichever strategy is adopted, time scales are generally measured in decades and many critical stages are involved.

Power Cluster Assembly - RHS

Blakley Electrics have recently been involved with a dismantling project, which is nearing the end of the process. The high level radioactive material has been removed from site and the next stage is for low level radioactive material to be removed. This involves the stripping out and removal of all permanent services, including the top few millimetres of any contaminated walls and surfaces. Once this has been achieved, the building will be deemed “clean” and can be demolished in the conventional manner, leaving the site fully restored and fit for normal use.

To enable all of the low level material to be removed, the contractor has installed an array of 40 no. custom built, free-standing Power Clusters around the site. The specially built Power Clusters provide 400V, 230V and 110V plug-in power for the different contractors working on site. Safe working is a top priority and all mains voltage sockets are switched and interlocked to prevent insertion or withdrawal of plugs on load, and they are also RCD protected. The Power Clusters incorporate 2 no. 5 kVA transformers, each providing a 110V Reduced Low Voltage supply. One transformer feeds 110V sockets fitted to the Power Cluster and one transformer feeds temporary lighting. As the line to earth shock voltage is only 55V, the 110V sockets are not RCD protected. However, as the lighting circuits are potentially longer, they are protected by MCBs and RCDs, to ensure compliance with the 5 second disconnection time required by BS7671 for RLV circuits.

Power Cluster Assembly - LHS

Because all of the original permanent services have to be removed, the main contractor has also had to install temporary 110V lighting throughout the site. Most areas have no natural light and the facility also features many small rooms and corridors. For these reasons a high percentage of fittings require integral emergency modules. As the site does not work 24/7, the contractor needs to turn off most lights “out of hours” to save energy and reduce carbon emissions. Due to the wide use of emergency fittings and the consequent need to maintain a supply to emergency modules to keep batteries charged and to prevent damage to tubes (through repetitive discharging), Blakley Electrics unique Flori-67/4P plug-in lighting system has been installed, which features 4 core cabling and connectors. The lighting is fed from the Power Clusters, which incorporate a time clock and controlgear to switch off the tubes in fittings, whilst providing an unswitched supply to emergency modules, ensuring batteries are always fully charged. Key switches are also incorporated to enable emergency lights to be tested without interfering with non-emergency lighting. Over the page there is a schematic diagram of the Power Cluster and lighting system.

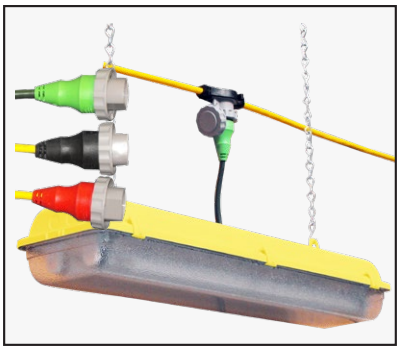

Flori-67/4P Lighting System

If you require further details, please contact us.

Experts in **high performance** power and lighting products
E: sales@blakley.co.uk W: www.blakley.co.uk

South: 1 Thomas Road, Optima Park, Crayford, Kent DA1 4QX T: 0333 188 0284
North: Suite 38, Pure Offices, Turnberry Park Road, Morley, Leeds LS27 7LE T: 0333 188 0285

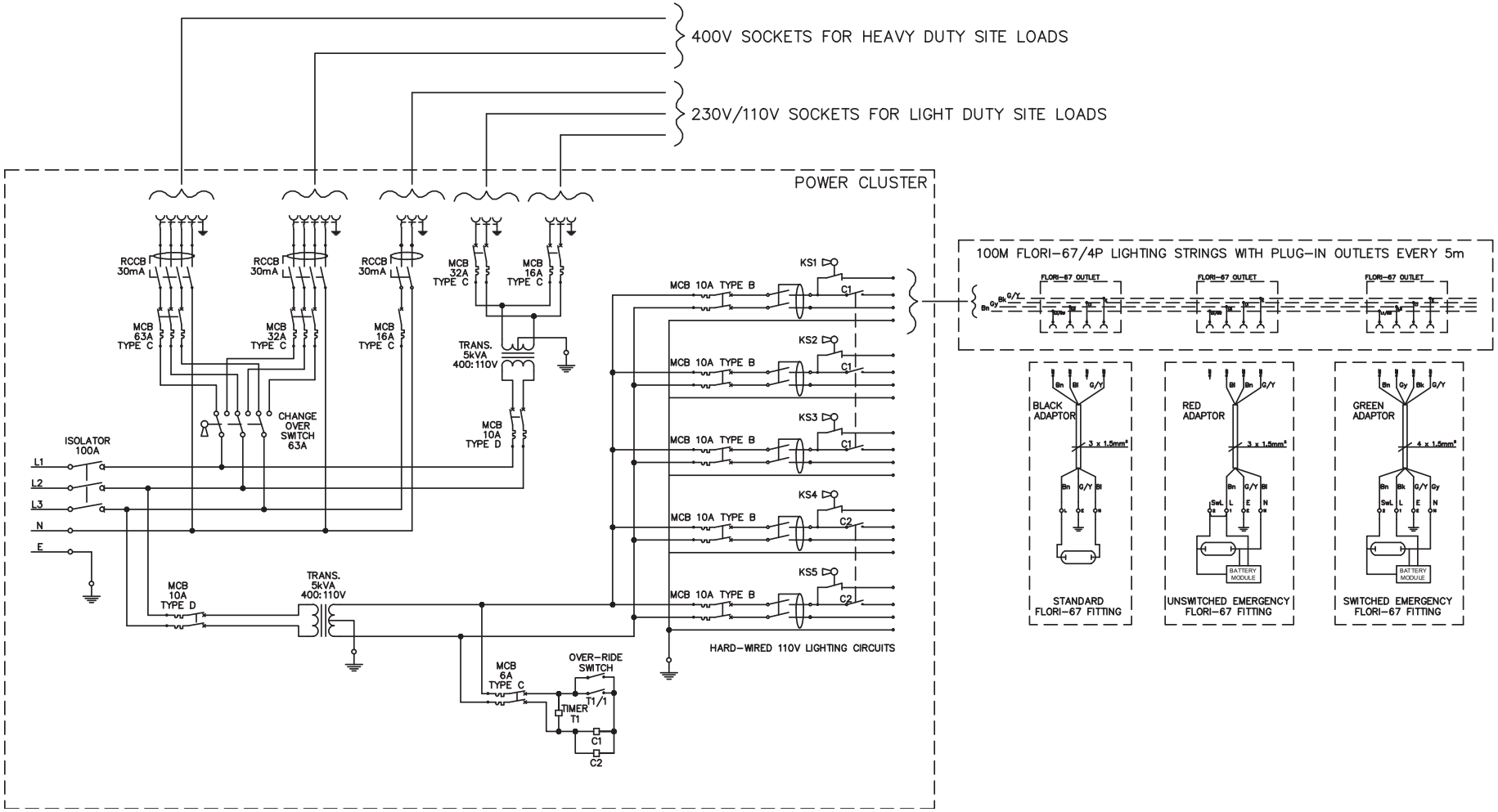

40 no. Special Power Cluster assemblies are at the heart of the temporary installation. Each is fitted with 400V, 230V and 110V sockets to meet site power requirements. In addition, there are dedicated 110V supplies for temporary lighting, which features time clock control, manual over-ride and key switches to test emergency lights without interfering with the standard site lights. To enable Emergency and Non-Emergency lights to be installed on every circuit and to enable the lighting to be switched off without damaging batteries or tubes in emergency fittings (through repetitive discharging), Blakley Electrics Flori-67/4P plug-in range has been adopted, which incorporates 4 core cable with switched and unswitched conductors.